NOTES: UNLESS OTHERWISE SPECIFIED

1. ALL DIMENSIONS ARE IN INCHES.
2. AREA DRAIN BODY MATERIAL: 12GA STAINLESS STEEL T316
3. SPECIFYING ENGINEER IS RESPONSIBLE FOR CONCRETE ENCASEMENT AND REINFORCING BASED UPON APPLICATION AND LOCAL CODES.
4. REFER TO https://info.slotdrainsystems.com/installresources FOR INSTALLATION INSTRUCTIONS.

REVISIONS			
REV	DESCRIPTION	DATE	BY
0	INITIAL RELEASE – R0	4/15/2020	DK
1	UPDATED DRAWING LAYOUT & REBAR DETAILS	7/14/2021	DK
2	UPDATED WITH GLOBAL DRAIN TEMPLATE	8/21/2024	DK

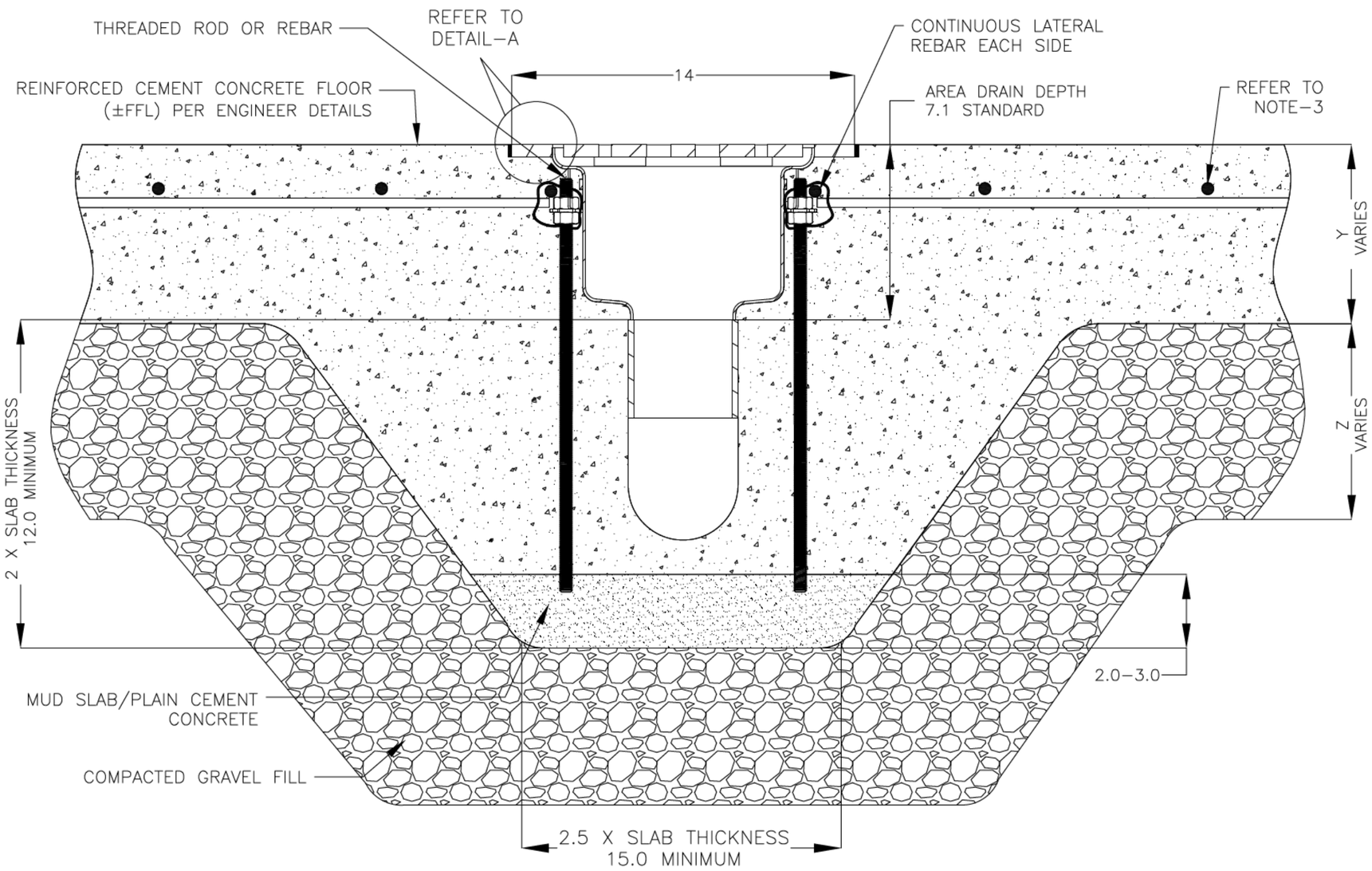

FOOD SAFE ROUND AREA DRAIN INSTALLATION DETAILS

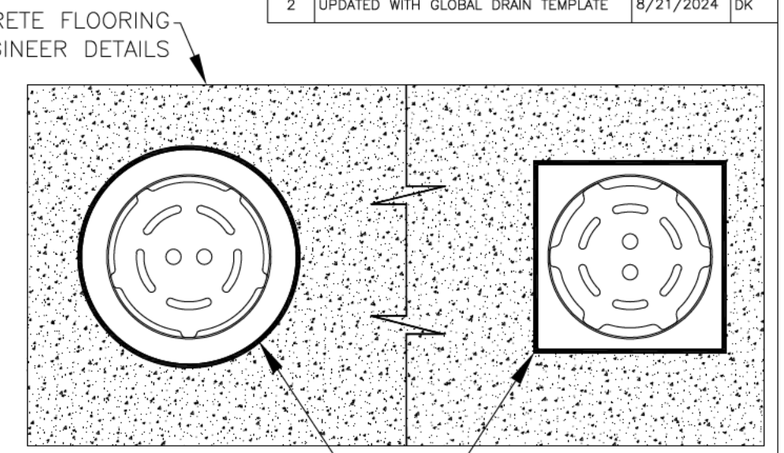

PLAN VIEW

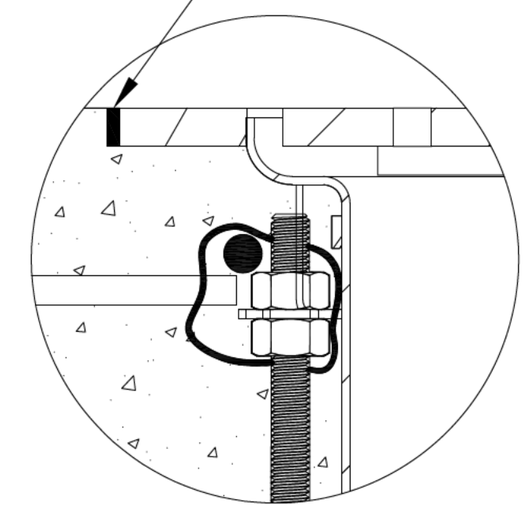

DETAIL–A

GLOBAL DRAIN TECHNOLOGIES

DRAWING TITLE: CONCRETE FLOOR–NEW CONSTRUCTION INSTALLATION

DRAIN SERIES: FOOD SAFE ROUND AREA DRAIN | REV. 2

DWG NO. IN–FSAD–002–R2 | SIZE B | SCALE NTS | SHEET 1 OF 1

ALL DRAWINGS ARE THE EXCLUSIVE PROPERTY OF SLOT DRAIN SYSTEMS. ANY REPRODUCTION IN PART OR IN WHOLE IS PROHIBITED WITHOUT PROPER CONSENT.